GATE VALVE

ART 200
Bronze gate valve
Non-rising stem
PN16



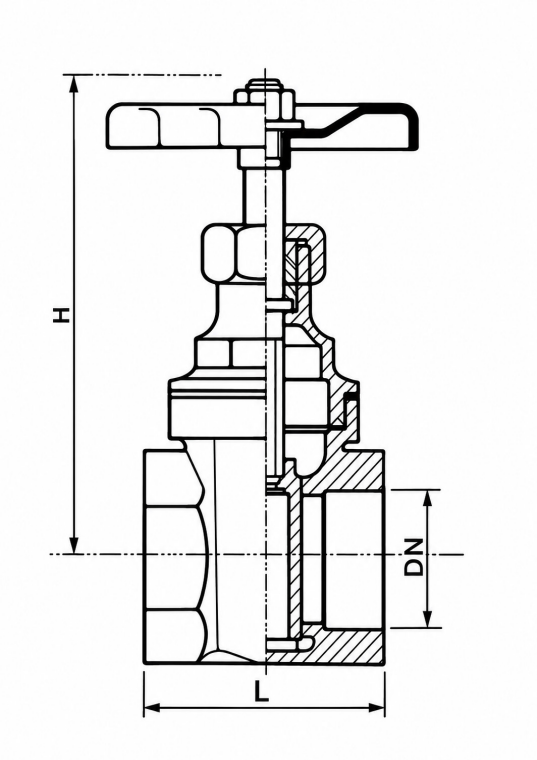

COD	DN	L	H	D	F	M	KG
200A02	3/8	38	66	45	13	9	0,160
200A03	1/2	38	68	45	15	9	0,200
200A04	3/4	45	78	50	19	10	0,320
200A05	1“	48	92	55	24	11	0,400
200A06	1“1/4	51	108	60	32	11	0,550
200A07	1“1/2	58	125	70	37	13	0,800
200A08	2“	62	145	80	47	13	1,200
200A09	2“1/2	76	175	100	60	16	2,200
200A10	3“	80	200	100	72	16	2,650
200A11	4“	96	240	120	93	19	4,610
200A12	5“	115	325	175	118	27	10,420
200A11	6“	121	360	200	142	27	13,000

All dimensions, weights and other technical data given are subject to revision.
KLINGER Finland Oy » Tinankuja 3, FI-02430 MASALA » +358 (0)10 400 1011 » info@klinger.fi » www.klinger.fi